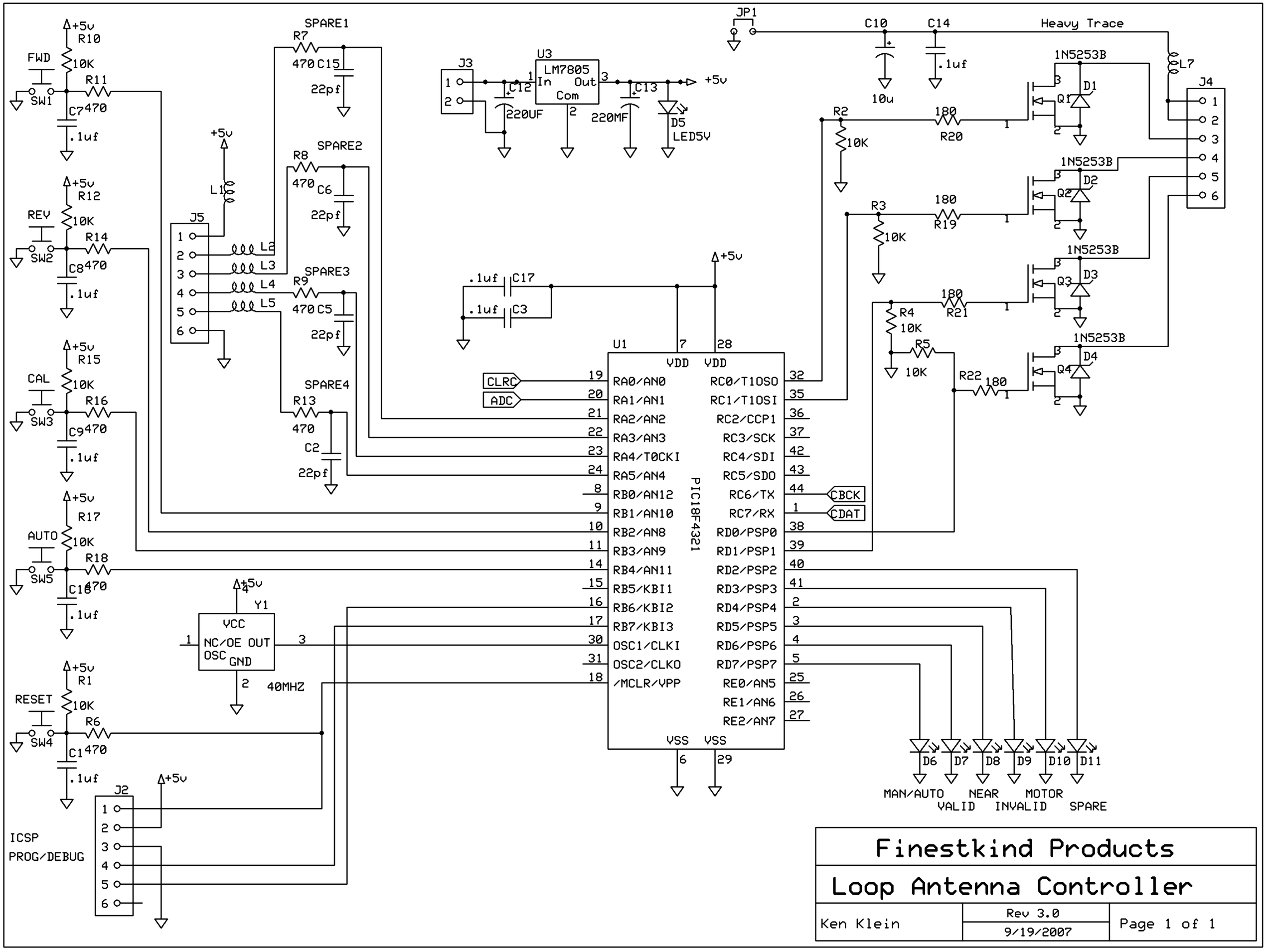
Finestkind Products
Loop Antenna Controller
Ken Klein
Rev 3.0
9/19/2007
Page 1 of 1
PIC18F4321
LM7805
In
Out
Com
40MHZ
VCC
NC/OE
OUT
OSC
GND
Heavy Trace
1N5253B
ICSP
PROG/DEBUG
MAN/AUTO
NEAR
VALID
MOTOR
INVALID
SPARE
CLRC
ADC
CBCK
CDAT
VDD
VSS
LED5V
SPARE1
SPARE2
SPARE3
SPARE4
FWD
REV
CAL
AUTO
RESET
RA0/AN0
RA1/AN1
RA2/AN2
RA3/AN3
RA4/T0CKI
RA5/AN4
RB0/AN12
RB1/AN10
RB2/AN8
RB3/AN9
RB4/AN11
RB5/KBI1
RB6/KBI2
RB7/KBI3
OSC1/CLKI
OSC2/CLKO
/MCLR/VPP
RC0/T1OSO
RC1/T1OSI
RC2/CCP1
RC3/SCK
RC4/SDI
RC5/SDO
RC6/TX
RC7/RX
RD0/PSP0
RD1/PSP1
RD2/PSP2
RD3/PSP3
RD4/PSP4
RD5/PSP5
RD6/PSP6
RD7/PSP7
RE0/AN5
RE1/AN6
RE2/AN7