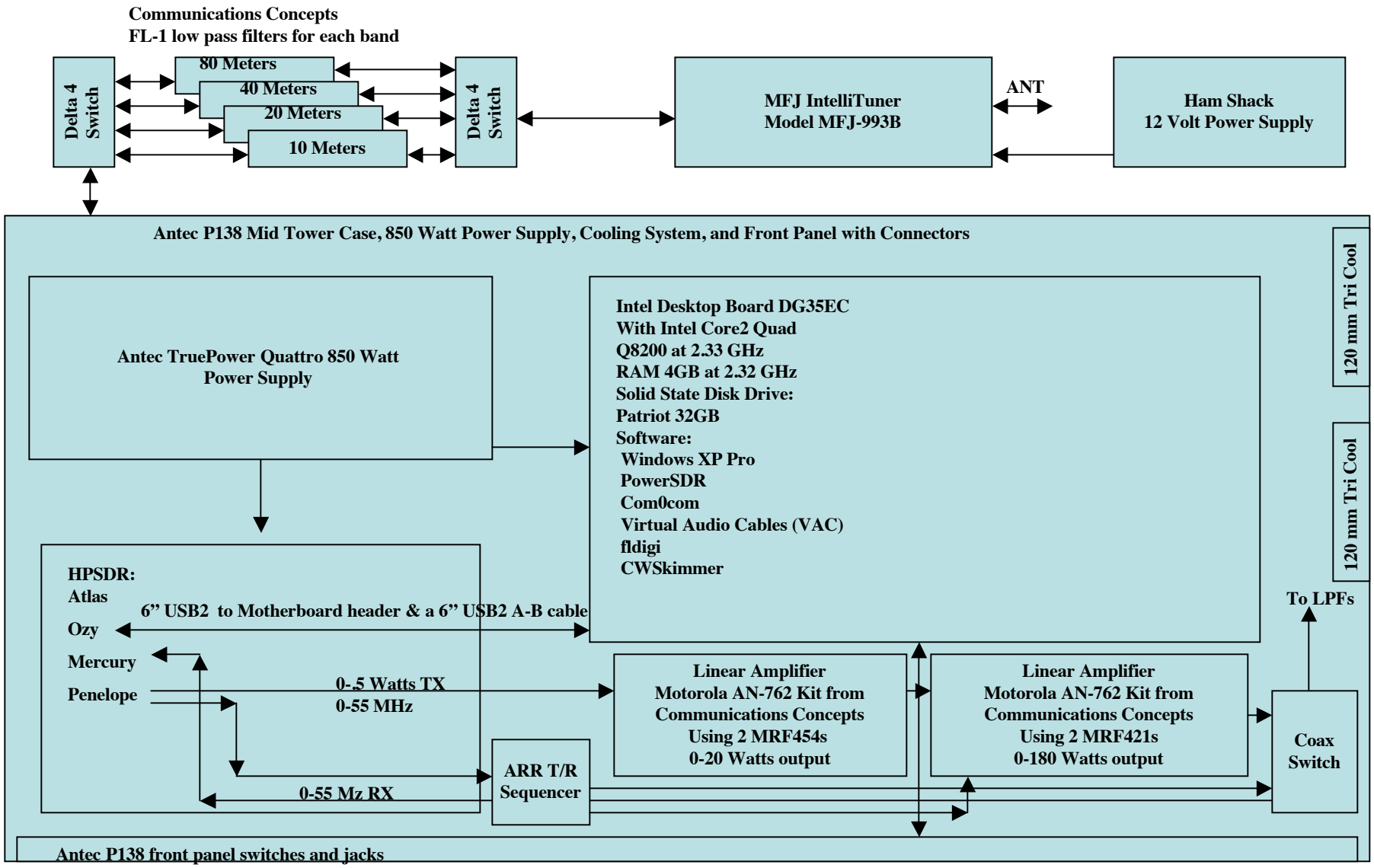Block Diagram of HPSDR in an Antec P138 Mid-Tower Case
By Ron Cox, W9KFB, 9/18/2009